# Electric Current (MCQ Set)

(1)

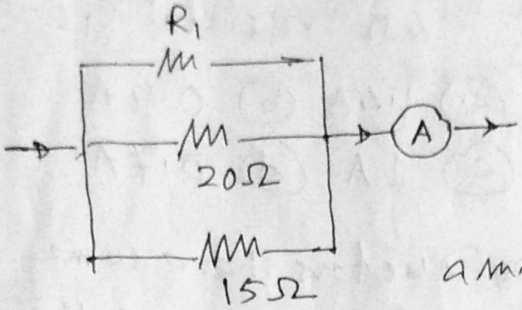


Current through resistance 20Ω is 0.3 A, Reading of ammeter is 0.8 A.

What is value of $R_1$ = ?

(a) 30Ω (b) 40Ω (c) 50Ω (d) 60Ω

(2) The drift velocity of free electrons in a conductor is 'v', when a current 'i' is flowing in it. If both the radius and current are doubled, then the drift velocity will be

(a) v (b) v/2 (c) v/4 (d) $\frac{v}{8}$.

(3)

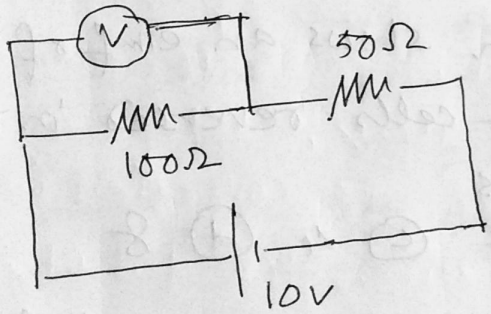


Reading of voltmeter is '5V'. Resistance of voltmeter is

(a) 200Ω (b) 100Ω

(c) 10Ω (d) 50Ω.

(4)

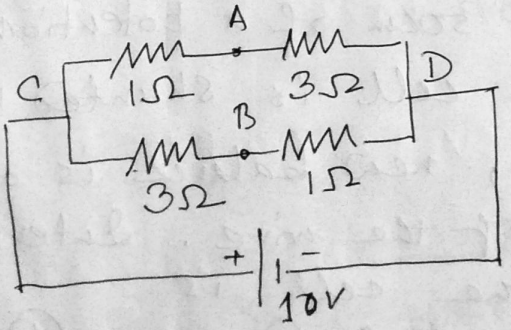


Find $V_A - V_B$

(a) −2V (b) 2V

(c) 5V (d) $\left(\frac{20}{11}\right)$V

(5)

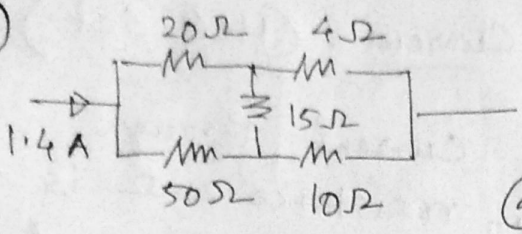


Current through 4Ω resistor is

(a) 1.4A (b) 0.4 A
(c) 1 A (d) 0.7 A

(6) Two different conductors have same resistance at 0°c. Resistance of the 1st conductor at $t_1$°c is equal to the resistance of the 2nd conductor at $t_2$°c. The ratio of the temperature coefficients of resistance of the conductors $\alpha_1/\alpha_2$ is (a) $t_1/t_2$ (b) $\frac{t_2-t_1}{t_2}$ (c) $\frac{t_2-t_1}{t_1}$ (d) $\frac{t_2}{t_1}$

(7) 32 cells each of emf 3V are connected in series and kept in a box. Externally, the combination shows an emf of 84V. The number of cells reversed in the combination is

(a) 0 (b) 2 (c) 4 (d) 8

(8) For a cell of emf 2V, a balance is obtained for 50cm of a potentiometer wire. If the cell is shunted by a 2Ω resistor, new balance is obtained across 40 cm of the wire. Internal resistance of the cell is

(a) 0.25Ω (b) 0.50Ω (c) 0.80Ω (d) 1Ω

(9) A car battery of emf 12V and internal resistance $5 \times 10^{-2}\ \Omega$ receives a current of 60A from external source. Then terminal potential difference of the battery is

(a) 12V (b) 9V (c) 15V (d) 20V

(10) A cell supplies a current '$I_1$' through a resistor of resistance '$R_1$' and a current '$I_2$' through a resistor of resistance '$R_2$'. Internal resistance of the cell is

(a) $R_1 - R_2$ (b) $R_1 + R_2$ (c) $\frac{I_1 R_2 + I_2 R_1}{I_1 + I_2}$

(d) $\frac{I_2 R_2 - I_1 R_1}{I_1 - I_2}$

(11)

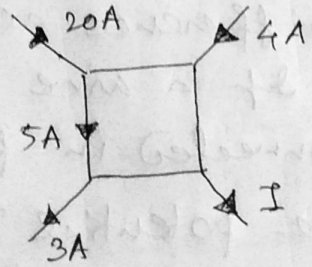


The value of '$I$' in the fig is

(a) 21A (b) 4A (c) 8A

(d) 19A

(12) Five identical resistors each of resistance $R = 1500\ \Omega$ are connected to a 300V battery as shown in fig. Reading of ideal ammeter 'A' is

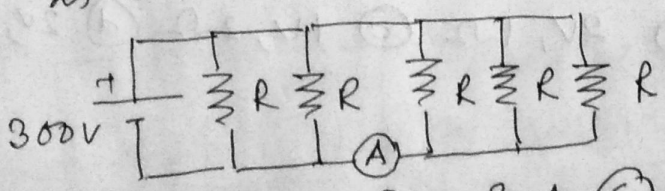


(a) $\frac{1}{5}$ A (b) $\frac{3}{5}$ A (c) $\frac{2}{5}$ A (d) $\frac{4}{5}$ A.

(13) The I–V graphs for two different electrical appliances 'P' and 'Q' are shown in diagram

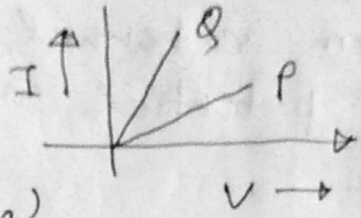


If '$R_P$' and '$R_Q$' be the resistances of the two devices then

(a) $R_P = R_Q$ (b) $R_P > R_Q$ (c) $R_P < R_Q$ (d) $R_P = \frac{R_Q}{2}$

(14)

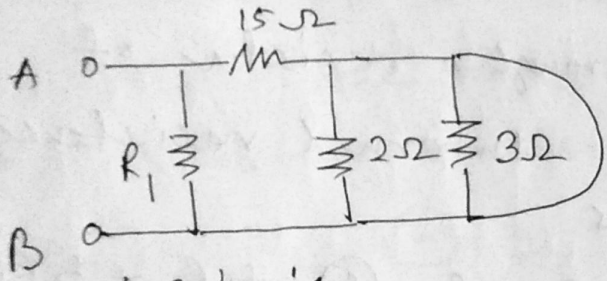


Equivalent resistance between 'A' and 'B' is 6Ω. Value of '$R_1$' is

(a) 20Ω (b) 10Ω (c) 5Ω (d) 25Ω

(15) When terminals of a cell are connected by a wire of resistance 4Ω, the potential difference across the cell is 1.6 V. If a wire of same resistance is connected in parallel to the first wire, the potential diff across cell becomes 1.33 V. EMF and internal resistance of the cell are respectively

(a) 1V, 1Ω (b) 2V, 1Ω (c) 1V, 2Ω (d) 2V, 2Ω.

(16)

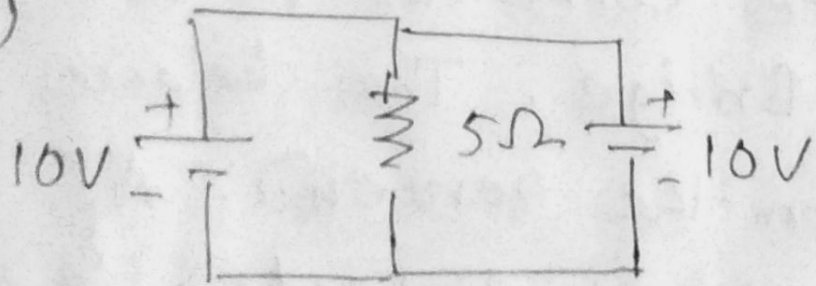


Current through 5Ω is

(a) 2A (b) 4A (c) 0

(d) 1A.

(17)

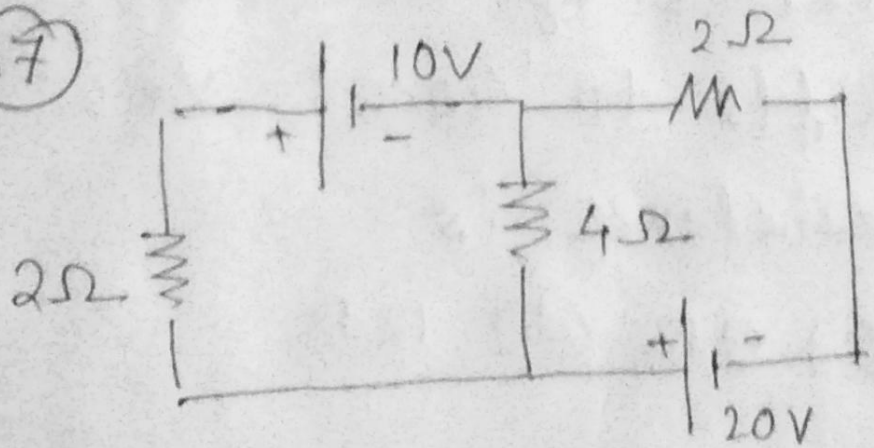


Current through 4Ω resistor in this circuit is

(a) 2A (b) 3A (c) 4.5A (d) 4A

(18)

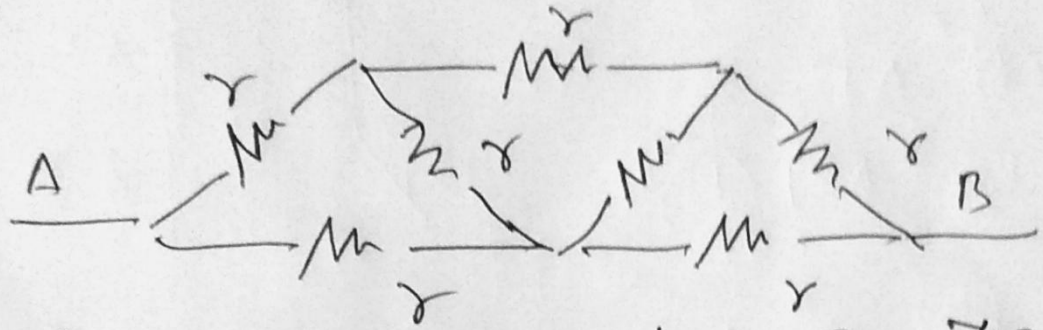


equivalent resistance between A & B is (a) $\frac{7r}{8}$ (b) $\frac{8r}{7}$ (c) $\frac{5r}{7}$ (d) $\frac{7r}{5}$

(19)

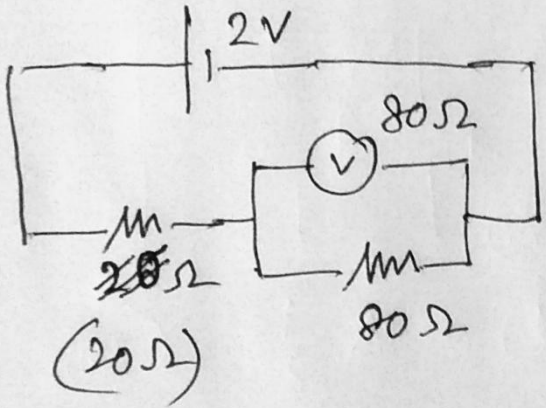


Reading of voltmeter is

(a) 2 volt (b) 1.33 Volt (c) 1.60 volt

(d) 0.80 volt.

(20) Two resistances are connected in two gaps of a Metre Bridge. The balance point is '20cm' from the zero end. A resistance of '15 Ω' is connected in series with the smaller of the two. The null point shifts to '40cm'. Value of the smaller resistance is

(a) 3 Ω (b) 6 Ω (c) 9 Ω (d) 12 Ω

—— o ——